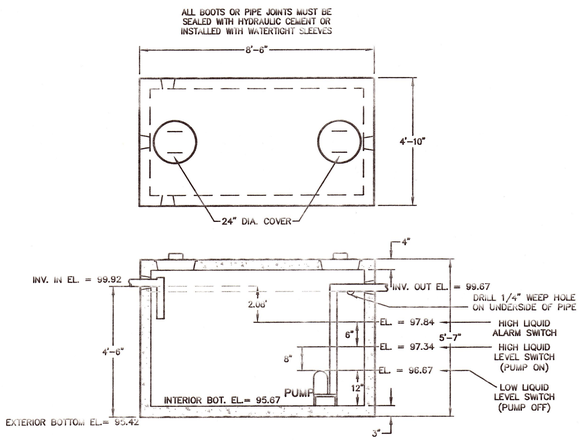

1000 GAL. PUMP CHAMBER
H–10
NOT TO SCALE

PUMP NOTES:

1) USE A BARNES PUMP MODEL SE411 SERIES WITH A 4.25" IMPELLAR DIAMETER. ANY OTHER PUMP MUST BE APPROVED BY THE DESIGN ENGINEER. PUMPS MUST BE CAPABLE OF LIFTING A 10.36' HEAD AND PASSING 1 1/4" SOLIDS. PUMP MOTOR SHALL BE FULLY SUBMERSIBLE AND HAVE THE FOLLOWING CAPABILITIES: 4/10 HORSEPOWER, 115V, 60 CYCLE, 1725 RPM, 40 GALLONS PER MINUTE FOR 10.36' DYNAMIC HEAD. PUMPS MAY BE PURCHASED FROM WILLIAMSON NEW ENGLAND ELECTRIC MOTOR SERVICE CORP LOCATED AT 111 BOSTON STREET EVERETT, MA. 02149. TELEPHONE # (617) 394–5060

2.) PUMP SHALL BE INSTALLED IN ACCORDANCE WITH THE MANUFACTURERS SPECIFICATIONS BY A QUALIFIED INSTALLER. ALL ELECTRICAL CONNECTIONS SHALL BE LOCATED OUTSIDE THE TANK.

3.) PUMP CHAMBER CONSTRUCTION AND MATERIALS SHALL BE IN ACCORDANCE WITH 310 CMR 15.221 AND 15.226. CHAMBER SHALL BE EQUIPPED WITH TWO 24 INCH MANHOLE LOCATED WITHIN 6" OF FINAL GRADE. THE PUMP CHAMBER SHALL BE EQUIPPED WITH ON AND OFF FLOTATION SWITCHES AND HAVE EMERGENCY STORAGE CAPACITY ABOVE THE OPERATING LEVEL CAPABLE OF STORING THE DAILY DESIGN FLOW OF THE SYSTEM.

4.) THE PUMP MUST BE EQUIPPED WITH A HIGH WATER ALARM. THE ALARM SHALL BE LOCATED IN THE BUILDING SERVED AND BE POWERED BY A CIRCUIT SEPARATE FROM THE CIRCUIT TO THE PUMPS.

BUOYANCY CALCULATIONS

MAXIMUM GROUNDWATER ELEVATION = 98.9

PUMP TANK (H–10)

PROPOSED TANK BOTTOM ELEV.= 95.42

1. BUOYANCY FORCE ON EMPTY TANK:
   VOLUME DISPLACED = 8.5' X 4.83' X (98.9 – 95.42)
   = 142.9 C.F.
   WT. OF DISPLACED WATER = 142.9 C.F. X 62.4 #/C.F.
   = 8,915 # ↑

2. WEIGHT OF EMPTY TANK:
   VOLUME: TOP/BOTTOM = 8.5' X 4.83' X (3" + 4") = 23.95 C.F.
   ENDS = 2 X (4.33' X 5.00' X 0.25') = 10.83 C.F.
   SIDES = 2 X (8.50' X 5.00' X 0.25') = 21.25 C.F.
   TOTAL VOLUME = 56.03 C.F.
   WT. OF EMPTY TANK = 56.03 C.F. X 150 #/C.F. = 8,405 # ↓

3. WEIGHT OF SOIL ABOVE TANK:
   VOLUME = 1' DEEP X 8.5' X 4.83' = 41.1 C.F.
   WEIGHT = 41.1 C.F. X 110 #/C.F. = 4,516 # ↓

4. SUM OF FORCES:
   F.S. = (8,405 # + 4,516 #) ÷8,915 # = 1.4 FACTOR OF SAFETY
   WT. OF TANK + SOIL IS GREATER THAN WT. OF DISPLACED WATER
   ∴ OK

PUMP CALCULATIONS

DESIGN FLOW = 330 GPD

LEACHING SYSTEM: 13"D X 14.17'W X 20'L LEACHING FIELD WITH 25 CHAMBERS

VOLUME OF DELIVERY PIPE = 3.14 X $(1/12\ FT)^2$ X 27 FT = 0.59 C.F.
= 0.59 C.F. X 7.48 GAL/C.F. = 4.4 GAL.

EACH DOSE WILL EQUAL 1/2 DAILY FLOW VOLUME (PLUS VOLUME OF DELIVERY PIPE)
(165 + 4.4) GALLONS/(7.48 GAL./C.F.) = 22.65 C.F.

AREA OF PUMP CHAMBER = (4'–4")(8–0") = 34.67 S.F.

DEPTH PUMPED PER CYCLE = (22.65 C.F/34.67 S.F.) = 0.65' (8")

AMOUNT OF HEAD REQUIRED = (INVERT INTO D–BOX) – (ELEVATION OF INTERIOR BOTTOM OF PUMP TANK)
= 104.94 – 95.67 = 9.27'

FRICTION LOSS
USE A 2" SCH. 40 FORCE MAIN
TRY PUMPING AT ± 40 GPM
EQUIVALENT PIPE LENGTH FOR 90° BEND = 5.5'
EQUIVALENT PIPE LENGTH FOR 45° BEND = 2.5'
TOTAL LENGTH OF PIPE = 27' + 1(5.5)' + 1(2.5)' = 35'
FRICTION LOSS PER 100' OF PIPE = 3.11
TOTAL LOSS DUE TO FRICTION = (0.35')(3.11)
= 1.09'

TOTAL DYNAMIC HEAD = 9.27' + 1.09' = 10.36'

EMERGENCY STORAGE CAPACITY CALCULATION
STORAGE NEEDED = 330 GALLONS
(330 GAL.) X (1 C.F./7.48 GAL.) = 44.12 C.F.

AREA OF TANK = (8') (4'–4") = 34.67 S.F.

REQUIRED EMERGENCY STORAGE DEPTH = (44.12 C.F./34.67 S.F.)
= 1.27'

DEPTH PROVIDED = 2.08'

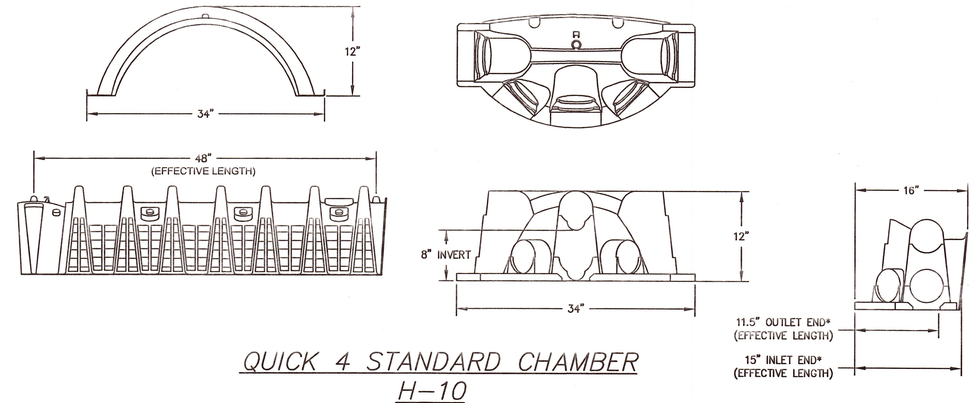

QUICK 4 STANDARD CHAMBER
H–10
NOT TO SCALE

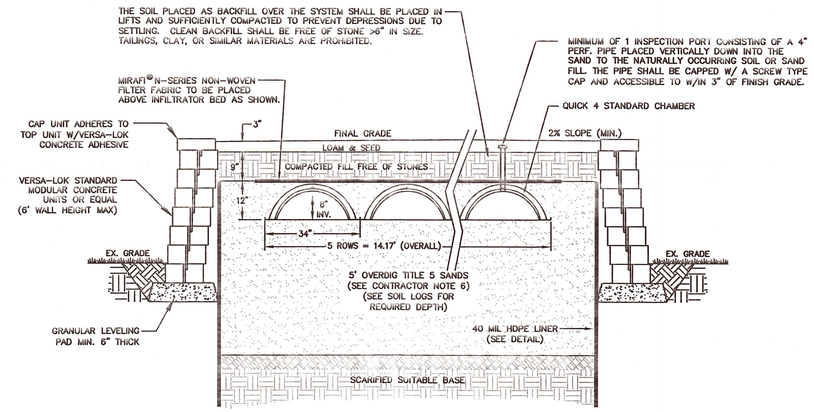

QUICK 4 CHAMBER BED CONFIGURATION
NOT TO SCALE

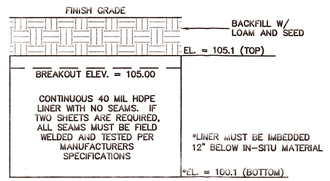

STAND LINER UP AGAINST EXISTING EARTH AND BACK FILL WITH MATERIAL TO MEET CONTRACTOR NOTE 6 SPECIFICATIONS. WHILE BACKFILLING USE CARE. LINER MADE BY MILLER ENVIRONMENTAL PRODUCTS, INC. (508)–697–3710.

40 MIL HDPE LINER DETAIL
NOT TO SCALE

APPLICANT:

MIKE CORREIA
15 FULLER SHORES ROAD
LAKEVILLE, MA 02347

OWNER:

MIKE CORREIA
15 FULLER SHORES ROAD
LAKEVILLE, MA 02347

REVISIONS

NO.	DATE	DESCRIPTION	BY

ENGINEERING STAMP

COMMONWEALTH OF MASSACHUSETTS
JASON A. YOUNSQUIST
CIVIL
No. 45872
REGISTERED PROFESSIONAL ENGINEER
5-5-20

SUBSURFACE SEWAGE DISPOSAL SYSTEM UPGRADE

15 FULLER SHORES RD

(ASSESSORS MAP:44 BLOCK:2 LOT:5)

LAKEVILLE MASSACHUSETTS

Outback Engineering Incorporated

165 EAST GROVE STREET
MIDDLEBOROUGH, MASS. 02346
TEL: 1–(508) 946–9231
FAX: 1–(508) 947–8873
www.outback–eng.com

SHEET NUMBER 2 OF 2

SCALE: N.T.S.

DATE: 5–5–2020

DRAWING: OE–3545–BOH.DWG

DRAWN: T.E.M.

CHECKED: J.A.Y.

OE–3545